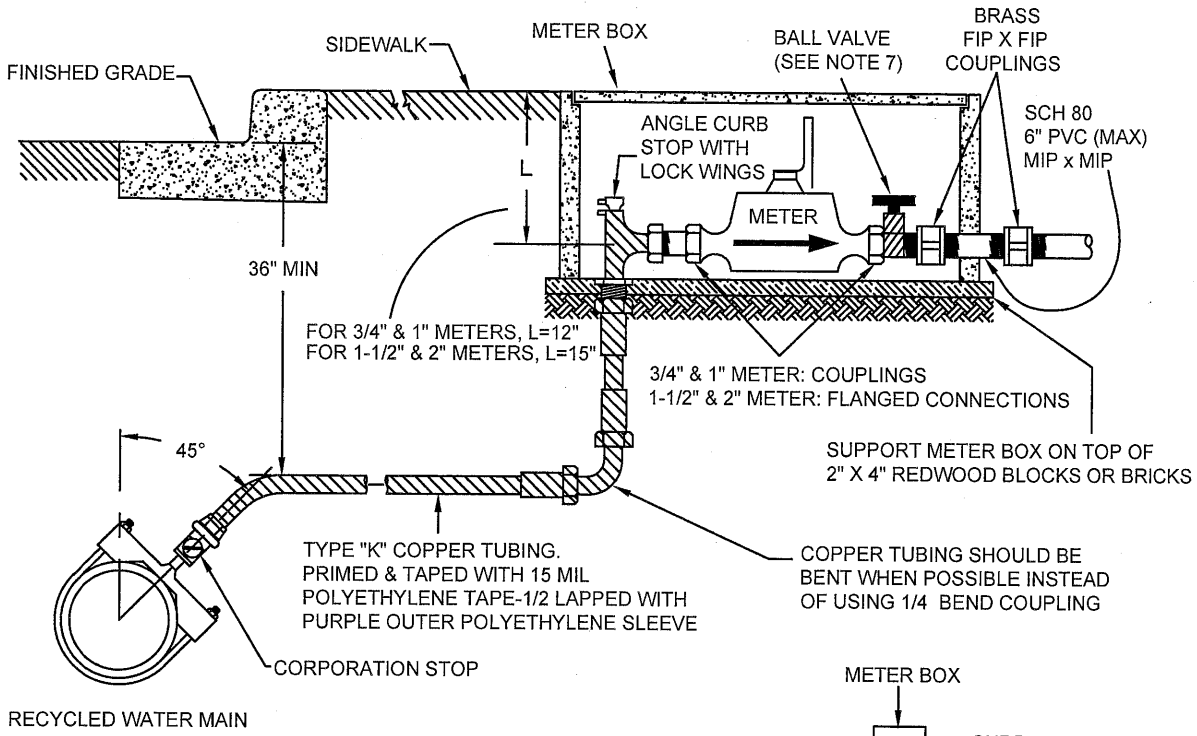

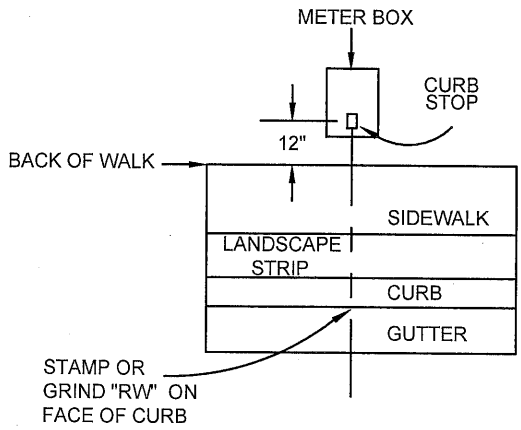

LOCATE ALL METERS BEHIND WALK

MAIN TYPE	SERVICE CONNECTION TYPE
D.I.P.	STAINLESS STEEL FULL CIRCLE CLAMP WITH THREADED CORPORATION STOP TO BE USED ON ALL 1" AND 2" SERVICES.
P.V.C.	SERVICE SADDLES FORD S-90 OR AS APPROVED BY ENGINEER.

NOTES:

1. INSTALL ONE-FOURTH ($\frac{1}{4}$) INCH PLYWOOD TO BLOCK PIPE PENETRATIONS INTO METER BOX.
2. CLEAN METER BOX OF DEBRIS. NO EARTH-TO-METER CONTACT.
3. SEE STANDARD DETAIL D-31 FOR CATHODIC PROTECTION REQUIREMENT, WHEN REQUIRED BY ENGINEER BASED ON LOCATION.
4. METERS SHALL HAVE PURPLE RECYCLED WATER REGISTER.
5. METER BOX COVER AND LID SHALL BE PURPLE - STAMPED RECYCLED WATER.
6. WHEN USING A TURBINE METER, INSTALL STRAINER UPSTREAM OF METER.
7. 3/4" & 1" BALL VALVE SHALL BE STRAIGHT BALL VALVE BY METER SWIVEL NUT WITH LOCK WINGS. 1-1/2" & 2" BALL VALVE SHALL BE STRAIGHT BALL VALVE FLANGED WITH LOCK WINGS.

Revision	Date	Approved
Drawn: IL	Date: 6/30/15	
Checked: AT	Scale: NTS	

APPROVED BY: Jacqueline A. Solomon

7/1/15 DATE — 12/31/15 EXP. — 57093 R.C.E. NO.

REGISTERED PROFESSIONAL ENGINEER JACQUELINE ANDREWS SOLOMON No. 57093 CIVIL STATE OF CALIFORNIA

CITY OF MOUNTAIN VIEW
PUBLIC WORKS DEPARTMENT
STANDARD DETAIL

RECYCLED WATER

STANDARD 1" AND 2" WATER SERVICES WITH

3/4", 1", 1-1/2", AND 2" WATER METERS

FILE NO. RW-1

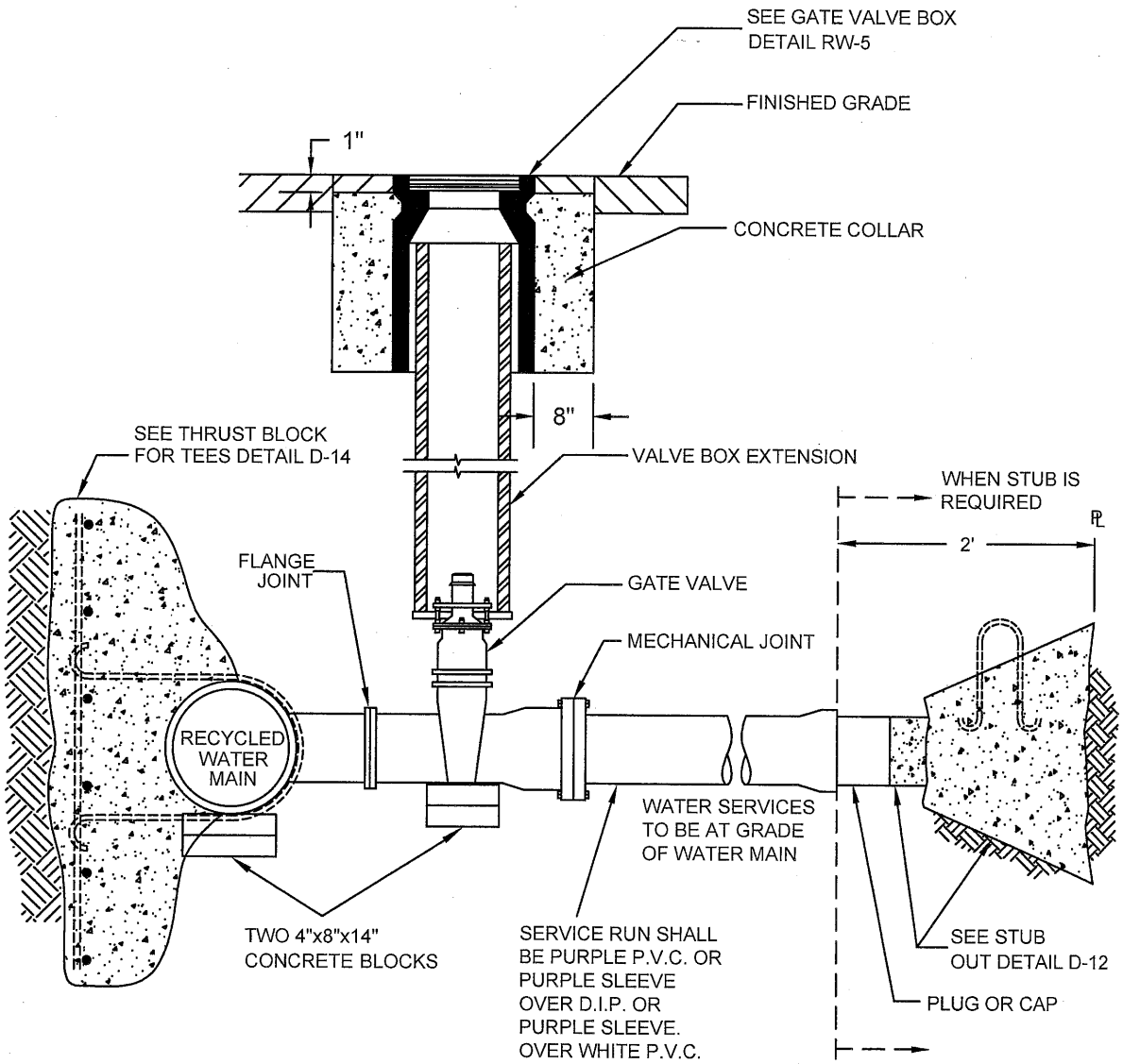

GATE VALVE ANCHOR REQUIRED WHEN VALVE IS NOT CONNECTED BY FLANGE JOINT TO MAIN TEE

Revision	Date	Approved
Drawn : IL	Date : 6/30/15	
Checked : AT	Scale : NTS	

APPROVED BY: Jacqueline A Solomon

7/1/15 DATE | 12/31/15 EXP. | 57093 R.C.E. NO.

REGISTERED PROFESSIONAL ENGINEER JACQUELINE ANDREWS SOLOMON No. 57093 CIVIL STATE OF CALIFORNIA

CITY OF MOUNTAIN VIEW
PUBLIC WORKS DEPARTMENT
STANDARD DETAIL

RECYCLED WATER
SERVICE 4" OR LARGER
WITH 3" OR LARGER METER

FILE NO. RW-2

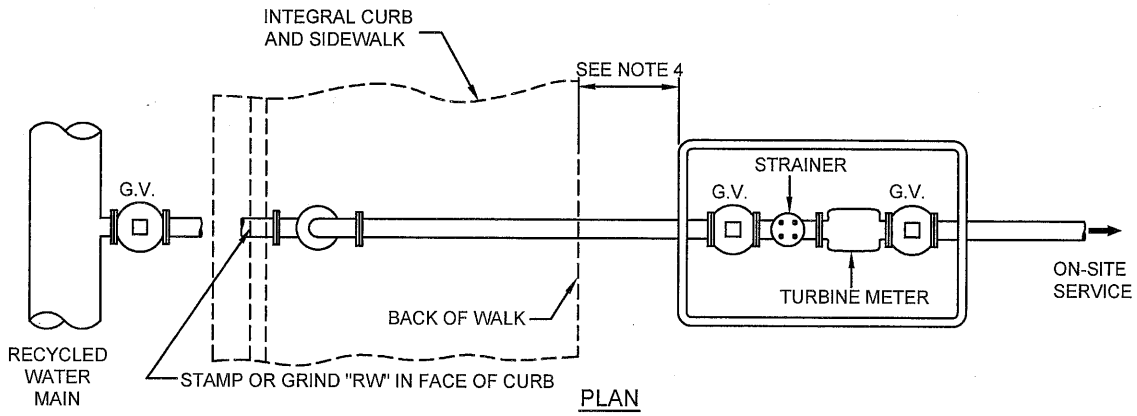

PLAN

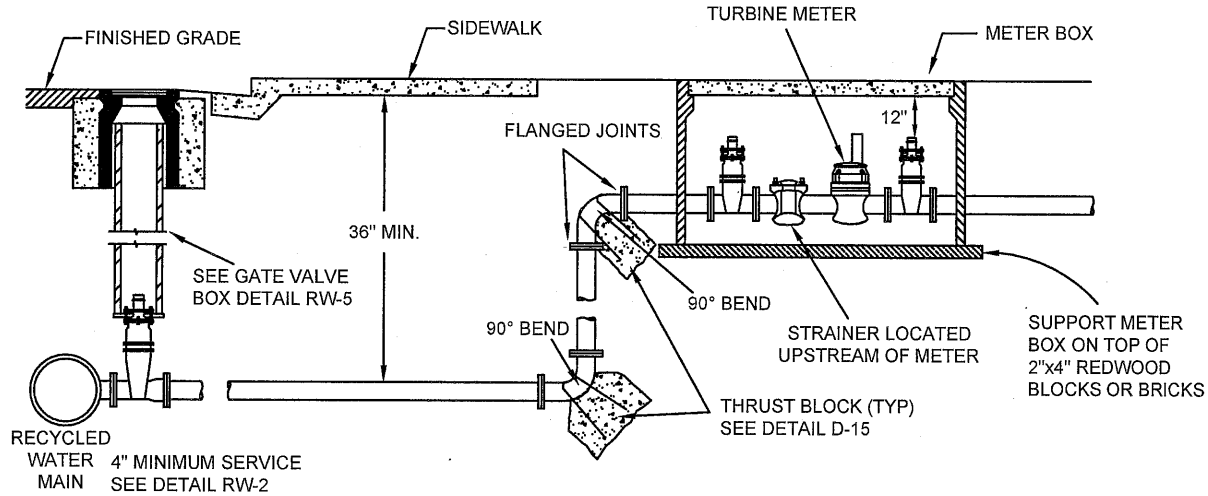

ELEVATION

NOTES:

1. THE METER AND METER BOX MAY BE ROTATED 90° TO COMPENSATE FOR SPACE REQUIREMENTS.
2. ALL JOINTS SHALL BE FLANGED TYPE, OR MECHANICAL TYPE JOINTS WITH RETAINER GLANDS. COAT BOLTS, NUTS AND RETAINER GLANDS WITH MASTIC COATING SOLUTION.
3. WRAP ALL DUCTILE IRON PIPE, FITTINGS AND VALVES WITH 8 MIL PURPLE POLYETHYLENE SLEEVE.
4. LOCATION OF METER + BACKFLOW TO BE DETERMINED BY CITY ENGINEER.
5. INSTALL 1/4 " PLYWOOD TO BLOCK PIPE PENETRATIONS INTO METER BOX
6. CLEAN METER BOX OF DEBRIS. NO EARTH TO METER CONTACT.
7. SEE STANDARD DETAIL D-31A FOR CATHODIC PROTECTION REQUIREMENTS, WHEN REQUIRED BY ENGINEER BASED ON LOCATION.
8. METERS SHALL HAVE PURPLE RECYCLED WATER REGISTER.
9. METER BOX COVER AND LID SHALL BE PURPLE - STAMPED RECYCLED.

Revision	Date	Approved
Drawn : IL	Date : 6/30/15	
Checked : AT	Scale : NTS	

APPROVED BY: Jacqueline A. Solomon

7/1/15 DATE — 12/31/15 EXP. — 57093 R.C.E. NO.

REGISTERED PROFESSIONAL ENGINEER JACQUELINE ANDREWS SOLOMON No. 57093 CIVIL STATE OF CALIFORNIA

CITY OF MOUNTAIN VIEW
PUBLIC WORKS DEPARTMENT
STANDARD DETAIL

RECYCLED WATER
3" OR LARGER WATER METER
TURBINE TYPE WITH STRAINER

FILE NO. RW-3

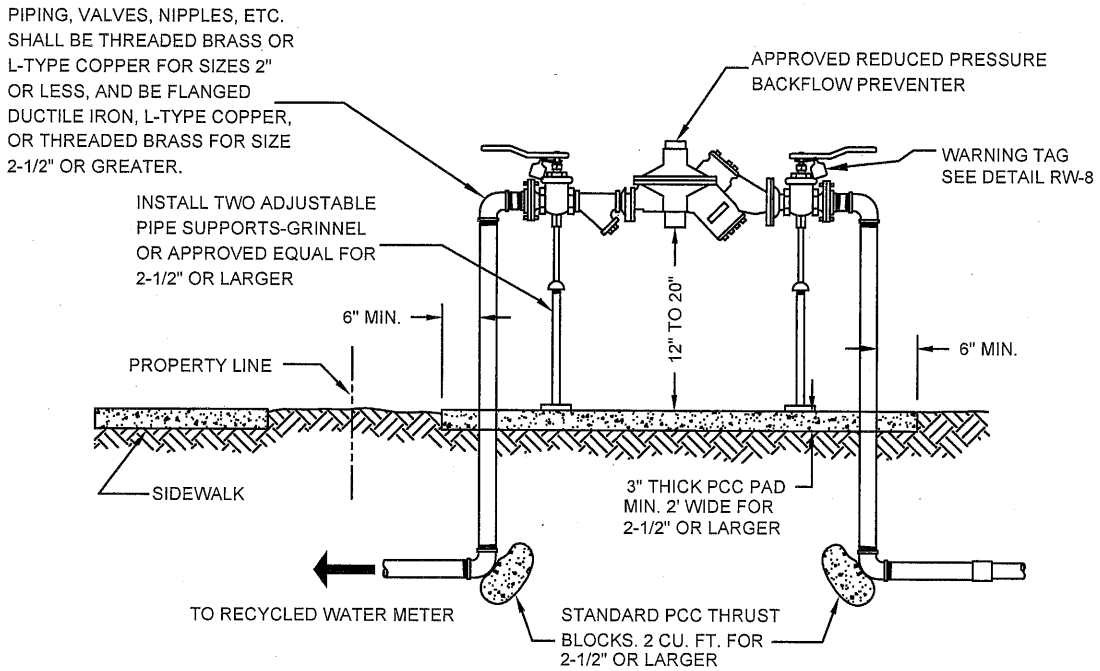

NOTES:

1. REDUCED PRESSURE TYPE BACKFLOW PREVENTION DEVICES ARE REQUIRED FOR ALL DUAL PLUMBED SITES OR AS OTHERWISE REQUIRED BY ENGINEER.
2. APPROVED REDUCED PRESSURE TYPE BACKFLOW PREVENTION DEVICES SHALL BE LISTED IN THE LATEST EDITION OF THE CITY STANDARD PROVISIONS.
3. ALL DEVICES THREE-QUARTER ($\frac{3}{4}$) INCH TO TWO (2) INCHES WILL HAVE FULL PORT DOMESTIC BALL VALVES, WITH THREADED ENDS. THREE (3) INCHES AND LARGER DEVICES WILL HAVE RESILIENT SEATED GATE VALVES, WITH FLANGED ENDS.
4. PRESSURE DIFFERENTIAL VALVE IS TO BE AT LEAST TWELVE (12) INCHES ABOVE GRADE TO A MAXIMUM OF TWENTY (20) INCHES.
5. BACKFLOW PREVENTION DEVICES SHALL BE INSTALLED ADJACENT TO AND ON PROPERTY SIDE OF SIDEWALK WHERE APPLICABLE.
6. NO CONNECTION BETWEEN THE BACKFLOW PREVENTER AND WATER METER WILL BE PERMITTED. BACKFLOW PREVENTERS SHALL BE PLACED DIRECTLY BEHIND THE WATER METERS UNLESS AN EXEMPTION IS GRANTED. IF AN EXEMPTION IS GRANTED, THE BACKFLOW PREVENTER SHALL BE SCREENED WITH LANDSCAPING AND THE TRENCHES SHALL BE LEFT OPEN SO THAT THE CITY CAN VERIFY THAT THERE ARE NO CONNECTIONS BETWEEN THE BACKFLOW PREVENTER AND THE METER. THE CITY RESERVES THE RIGHT TO TEST THE SYSTEM TO ENSURE THAT THESE REQUIREMENTS ARE MET.
7. WHERE A BACKFLOW PREVENTER IS INSTALLED MORE THAN ONE (1) FOOT BEHIND THE WATER OR IRRIGATION METER, THE PIPING BETWEEN THE BACKFLOW PREVENTER AND THE METER SHALL BE ENCASED IN CONTROLLED DENSITY FILL (CDF).
8. ALL ABOVE GROUND PIPING AND ASSEMBLY SHALL BE IDENTIFIED AS RECYCLED WATER SEE DETAIL RW-8.

Revision	Date	Approved
Drawn: IL	Date: 6/30/15	
Checked: AT	Scale: NTS	

APPROVED BY: Jacqueline A. Solomon

7/1/15 DATE — 12/31/15 EXP. — 57093 R.C.E. NO.

REGISTERED PROFESSIONAL ENGINEER JACQUELINE ANDREWS SOLOMON No. 57093 CIVIL STATE OF CALIFORNIA

CITY OF MOUNTAIN VIEW
PUBLIC WORKS DEPARTMENT
STANDARD DETAIL

RECYCLED WATER
REDUCED PRESSURE BACKFLOW PREVENTER
INSTALLATION

FILE NO. RW-4

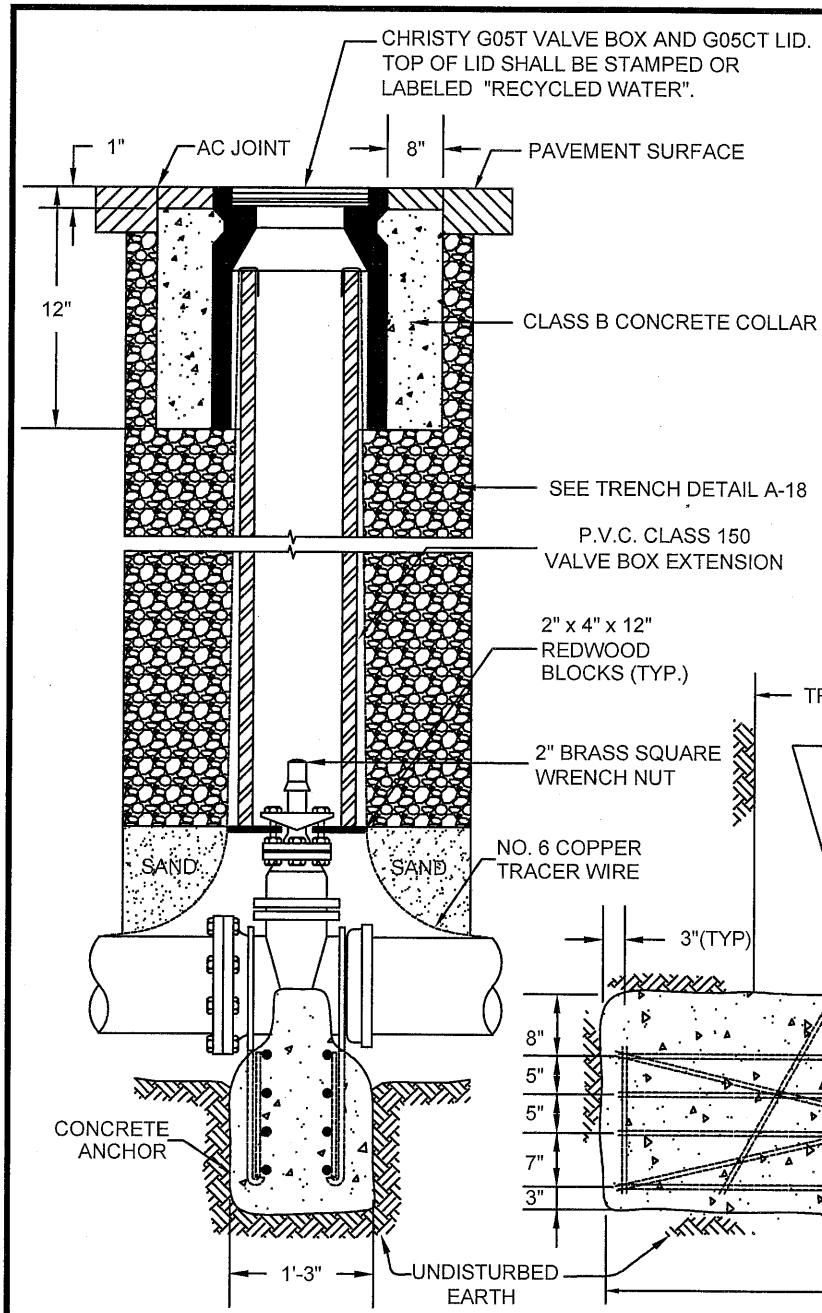

VALVE	ANCHORS
VALVE SIZE	"A"
4", 6"	1'-6"
8"	2'-6"
10"	4'-0"
12"	6'-0"
14"	7'-8"
16"	10'-0"

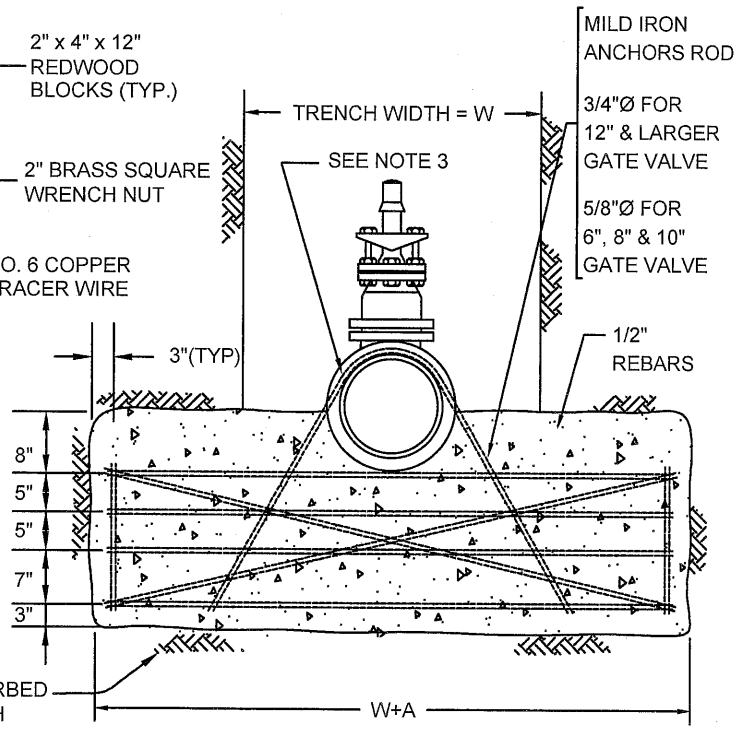

NOTES:

1. WHEN THERE IS A NEED TO RAISE VALVE COVER TO MEET NEW GRADE, ONLY ONE ADDITIONAL RING MAY BE ADDED.
2. FLANGES, BOLTS, AND NUTS SHALL BE KEPT CLEAR OF CONCRETE.
3. COAT EXPOSED PORTIONS OF ANCHOR RODS WITH A MASTIC COATING AND WRAP IN 10 MIL POLYETHYLENE TAPE.

Revision	Date	Approved
Drawn : JL	Date : 6/30/15	
Checked : AT	Scale : NTS	

APPROVED BY: Jacqueline A. Solomon

7/1/15 — DATE

12/31/15 — EXP.

57093 — R.C.E. NO.

REGISTERED PROFESSIONAL ENGINEER — JACQUELINE ANDREWS SOLOMON — No. 57093 — CIVIL — STATE OF CALIFORNIA

CITY OF MOUNTAIN VIEW
PUBLIC WORKS DEPARTMENT
STANDARD DETAIL

RECYCLED WATER
GATE VALVE BOX AND ANCHOR

FILE NO. RW-5

PARALLEL SEPARATION STANDARDS

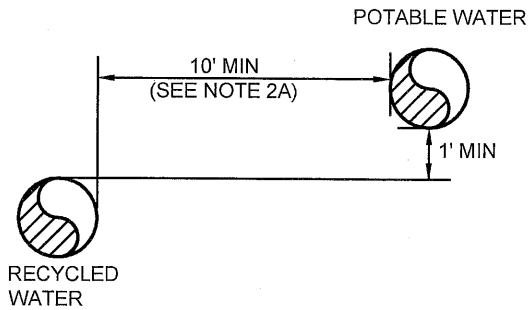

CROSSING SEPARATION STANDARDS

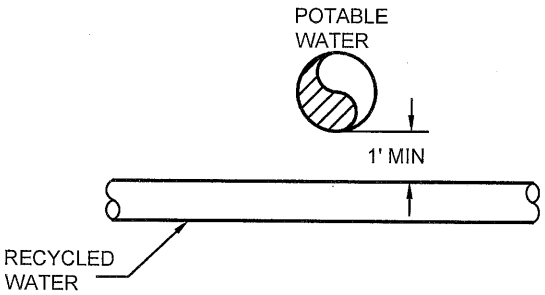

NOTES:

1. POTABLE AND RECYCLED PIPES SHALL NOT BE INSTALLED IN THE SAME TRENCH.
2. PARALLEL CONSTRUCTION
   A. THE HORIZONTAL SEPARATION BETWEEN POTABLE AND RECYCLED PIPES SHALL BE A MINIMUM OF TEN (10) FEET MEASURED BETWEEN OUTSIDE DIAMETERS FOR INSTALLATION IN PUBLIC RIGHT OF WAY, AND A MINIMUM OF FOUR (4) FEET ON-SITE.
   B. RECYCLED PIPES SHALL BE INSTALLED ONE (1) FOOT BELOW THE POTABLE PIPES WHERE THE TWO PIPES RUN PARALLEL TO EACH OTHER. WHERE THIS IS NOT POSSIBLE, THE PROPOSED DESIGN SHALL BE APPROVED BY THE CITY ENGINEER. DETAILS OF THIS INSTALLATION SHALL BE CLEARLY SHOWN ON THE PLANS.
3. CROSSING CONSTRUCTION
   A. RECYCLED WATER PIPES SHALL BE INSTALLED BELOW POTABLE WATER PIPES, WITH A MINIMUM VERTICAL SEPARATION OF ONE (1) FOOT, MEASURED BETWEEN OUTSIDE DIAMETERS.
   B. WHEN A RECYCLED WATER PIPE CROSSES A POTABLE WATER PIPE THE CROSSING SHALL BE AS CLOSE TO THE PERPENDICULAR AS PRACTICAL AND NO LESS THAN 45 DEGREES.
   C. PIPE JOINTS SHALL BE A MINIMUM OF EIGHT (8) FEET FROM POTABLE AND RECYCLED WATER PIPE CROSSINGS.
4. RECYCLED WATER SYSTEMS SHALL MEET THE MINIMUM TOP OF PIPE DEPTH REQUIREMENTS:
   A. INTERMITTENT PRESSURE LINES: TWELVE (12) INCHES.
   B. CONSTANT PRESSURE LINES $2\frac{1}{2}$ INCHES AND SMALLER: EIGHTEEN (18) INCHES.
   C. CONSTANT PRESSURE LINES THREE (3) INCHES AND LARGER: TWENTY-FOUR (24) INCHES.

Revision	Date	Approved

Drawn : IL	Date : 6/30/15
Checked : AT	Scale : NTS

APPROVED BY: Jacqueline C. Solomon

7/1/15 DATE — 12/31/15 EXP. — 57093 R.C.E. NO.

REGISTERED PROFESSIONAL ENGINEER JACQUELINE ANDREWS SOLOMON No. 57093 CIVIL STATE OF CALIFORNIA

CITY OF MOUNTAIN VIEW
PUBLIC WORKS DEPARTMENT
STANDARD DETAIL

RECYCLED WATER
SEPARATION STANDARDS

FILE NO. RW-6

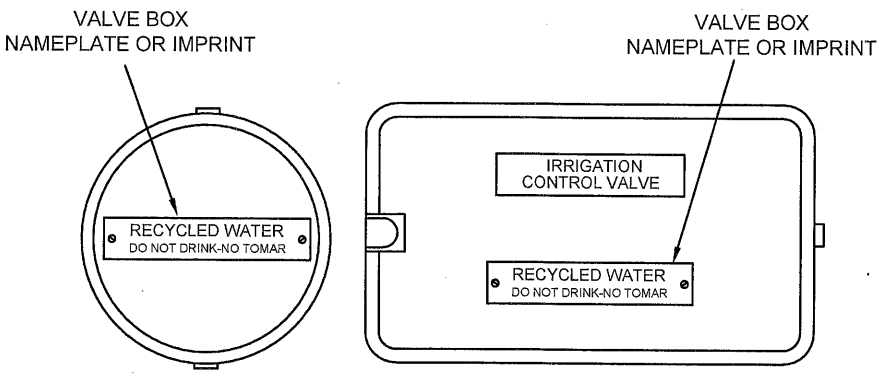

NOTE:

1. T. CHRISTY ENTERPRISES, INC. P/N: 3800 (OR EQUAL)

Revision	Date	Approved
Drawn : IL	Date : 6/30/15	
Checked : AT	Scale : NTS	

APPROVED BY: Jacqueline A Solomon

7/1/15 DATE

12/31/15 EXP.

57093 R.C.E. NO.

REGISTERED PROFESSIONAL ENGINEER JACQUELINE ANDREWS SOLOMON No. 57093 CIVIL STATE OF CALIFORNIA

CITY OF MOUNTAIN VIEW
PUBLIC WORKS DEPARTMENT
STANDARD DETAIL

RECYCLED WATER
IRRIGATION BOX LID IDENTIFICATION

FILE NO. RW-7

WARNING TAG DETAILS

RECYCLED WATER

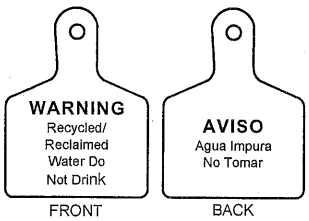

POTABLE WATER

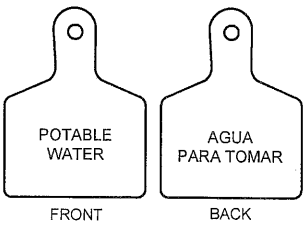

POTABLE WATER (USED FOR DUAL IRRIGATION SITES)

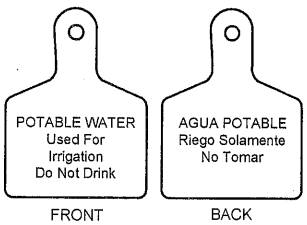

NOTES:

1. RECYCLED WATER TAG SHALL HAVE PURPLE BACKGROUND WITH BLACK LETTERING
2. T. CHRISTY ENTERPRISES INC. P/N: ID-MAX-P2-RC006 (OR EQUAL)
3. POTABLE WATER TAG SHALL HAVE BLUE BACKGROUND WITH BLACK LETTERING
4. T. CHRISTY ENTERPRISES INC. P/N: ID-MAX-B2-PW015 (OR EQUAL)
5. POTABLE WATER IRRIGATION TAG SHALL HAVE YELLOW BACKGROUND WITH BLACK LETTERING
6. T. CHRISTY ENTERPRISES INC. P/N: ID-MAX-Y2-PW017 (OR EQUAL)

RECYCLED WATER PIPE IDENTIFICATION

1. BURIED PIPES AND SLEEVES SHALL BE IDENTIFIED BY ONE OF THE FOLLOWING METHODS:
   A. PURPLE PVC PIPE CONTINUOUSLY LABELED "CAUTION: RECYCLED WATER - DO NOT DRINK." PIPE SHALL BE LAID WITH WORDS FACING UPWARDS.
   B. PURPLE IDENTIFICATION TAPE OR DECALS LABELED "CAUTION: RECYCLED WATER - DO NOT DRINK"; ADHESIVE, PERMANENT, AND RESISTANT TO COLOR FADING AND ENVIRONMENTAL CONDITIONS; IDENTIFICATION SHALL BE AFFIXED ALONG TWO (2) SIDES OF THE PIPE AT TEN (10) FEET INTERVALS AND WHERE THE PIPE CHANGES DIRECTIONS. PURPLE BANDS MAY ALSO BE PAINTED AROUND THE PIPE.
2. ABOVE GROUND PIPES SHALL BE PAINTED PURPLE (PANTONE #512) AND IDENTIFIED USING PURPLE IDENTIFICATION TAPE OR DECALS LABELED "CAUTION: RECYCLED WATER - DO NOT DRINK" ALONG TWO (2) SIDES OF THE PIPE AT TEN (10) FEET INTERVALS.

Revision	Date	Approved
Drawn: IL	Date: 6/30/15	
Checked: AT	Scale: NTS	

APPROVED BY: Jacqueline C A Solomon

7/1/15 DATE — 12/31/15 EXP. — 57093 R.C.E. NO.

REGISTERED PROFESSIONAL ENGINEER JACQUELINE ANDREWS SOLOMON No. 57093 CIVIL STATE OF CALIFORNIA

CITY OF MOUNTAIN VIEW
PUBLIC WORKS DEPARTMENT
STANDARD DETAIL

RECYCLED WATER
WARNING TAG DETAIL AND
PIPE IDENTIFICATION

FILE NO. RW-8

GATE VALVE

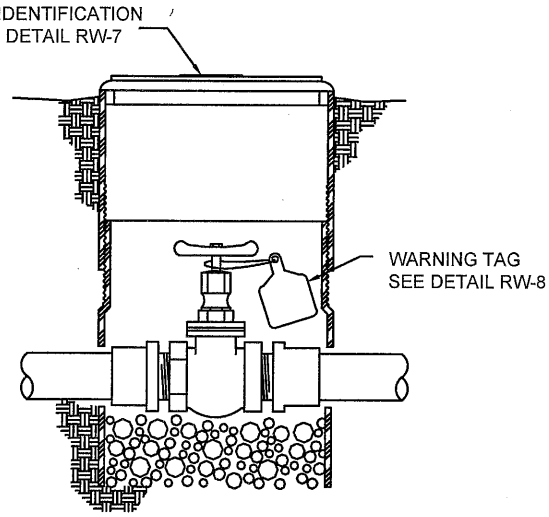

REMOTE CONTROL VALVE

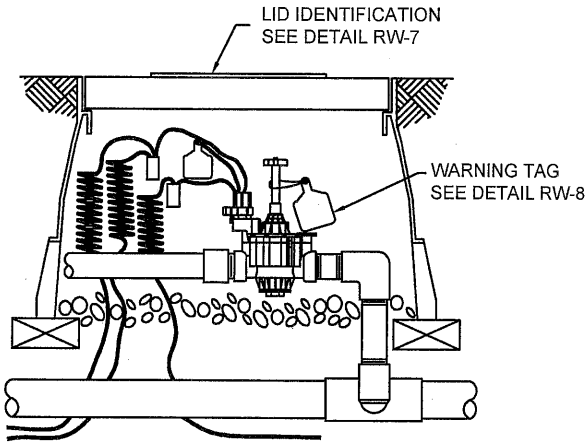

QUICK COUPLING VALVE

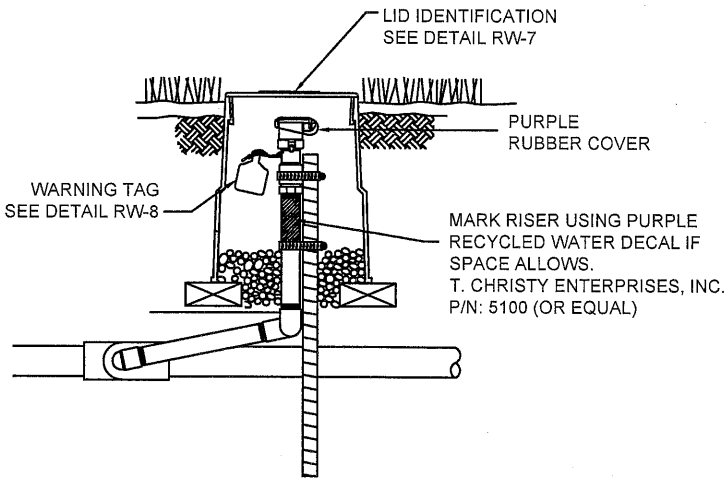

Revision	Date	Approved
Drawn : IL	Date : 6/30/15	
Checked : AT	Scale : NTS	

APPROVED BY: Jacqueline A. Solomon

7/1/15 DATE — 12/31/15 EXP. — 57093 R.C.E. NO.

REGISTERED PROFESSIONAL ENGINEER — JACQUELINE ANDREWS SOLOMON — No. 57093 — CIVIL — STATE OF CALIFORNIA

CITY OF MOUNTAIN VIEW
PUBLIC WORKS DEPARTMENT
STANDARD DETAIL

RECYCLED WATER
VALVE LABELING

FILE NO. RW-9

IRRIGATION ADVISORY SIGN

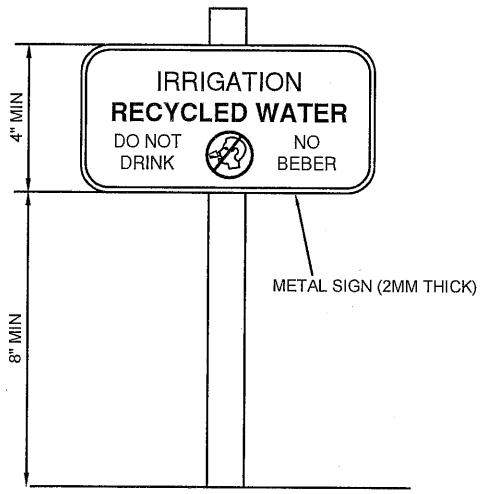

WATER FEATURE ADVISORY SIGN

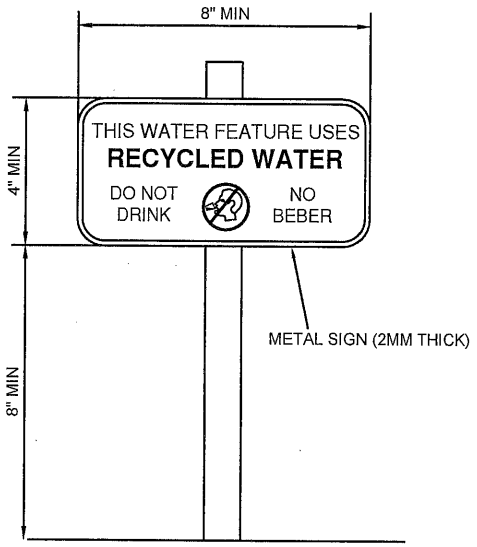

NOTES:

1. MOUNT SIGNS ON 4" X 4" REDWOOD POSTS OR AFFIX TO OTHER PERMANENT STRUCTURES.
2. MOUNT SIGNS SO THEY ARE CLEARLY VISIBLE AND NOT OBSCURED BY MATURE PLANTS.
3. LETTERING MUST BE LEGIBLY PRINTED ON A CONTRASTING BACKGROUND.
4. T. CHRISTY ENTERPRISES, INC. P/N: ID-SGN9X12WRW (OR EQUAL)

Revision	Date	Approved
Drawn : IL	Date : 6/30/15	
Checked : AT	Scale : NTS	

APPROVED BY:

Jacqueline Cassidomar

7/1/15 — DATE

12/31/15 — EXP.

57093 — R.C.E. NO.

REGISTERED PROFESSIONAL ENGINEER JACQUELINE ANDREWS CASSIDOMAR No. 57093 CIVIL STATE OF CALIFORNIA

CITY OF MOUNTAIN VIEW
PUBLIC WORKS DEPARTMENT
STANDARD DETAIL

RECYCLED WATER
ADVISORY SIGNS

FILE NO. RW-10

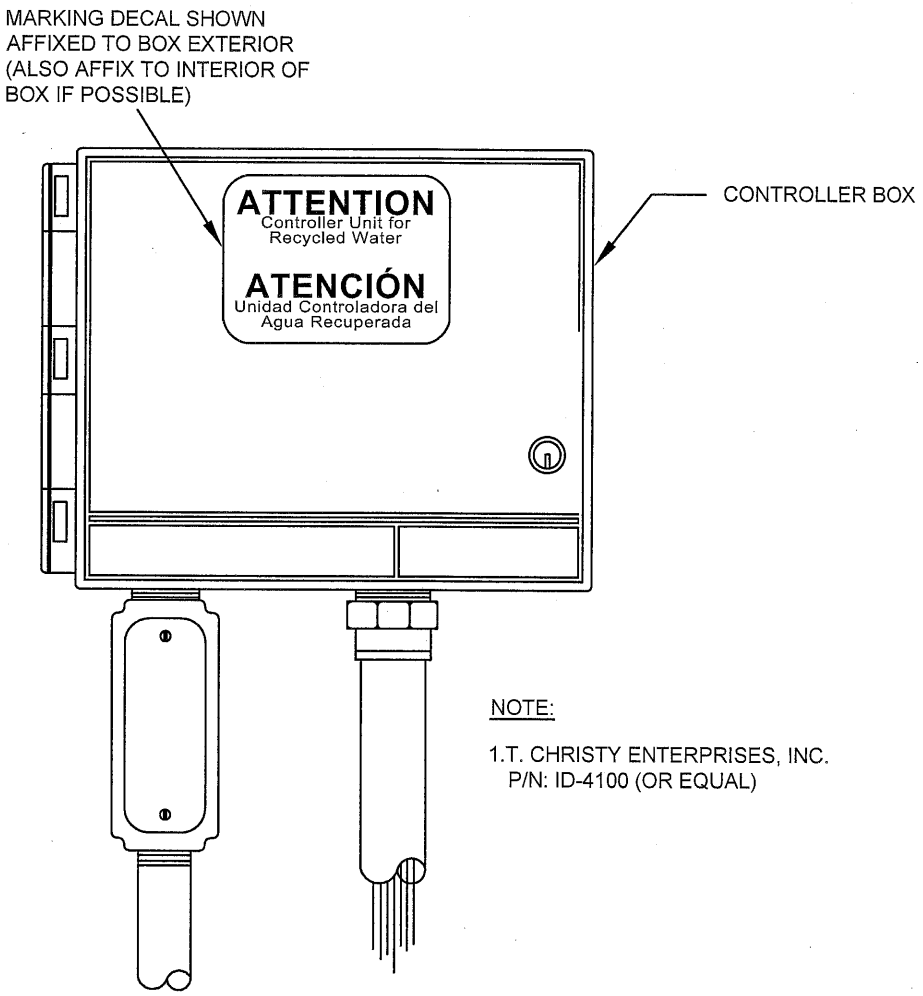

NOTE:

1.T. CHRISTY ENTERPRISES, INC.
P/N: ID-4100 (OR EQUAL)

Revision	Date	Approved

Drawn : IL	Date : 6/30/15
Checked : AT	Scale : NTS

APPROVED BY: Jacqueline Ca Solomon

7/1/15 — DATE

12/31/15 — EXP.

57093 — R.C.E. NO.

REGISTERED PROFESSIONAL ENGINEER — JACQUELINE ANDREWS SOLOMON — No. 57093 — CIVIL — STATE OF CALIFORNIA

CITY OF MOUNTAIN VIEW
PUBLIC WORKS DEPARTMENT
STANDARD DETAIL

RECYCLED WATER
CONTROLLER BOX IDENTIFICATION

FILE NO. RW-11

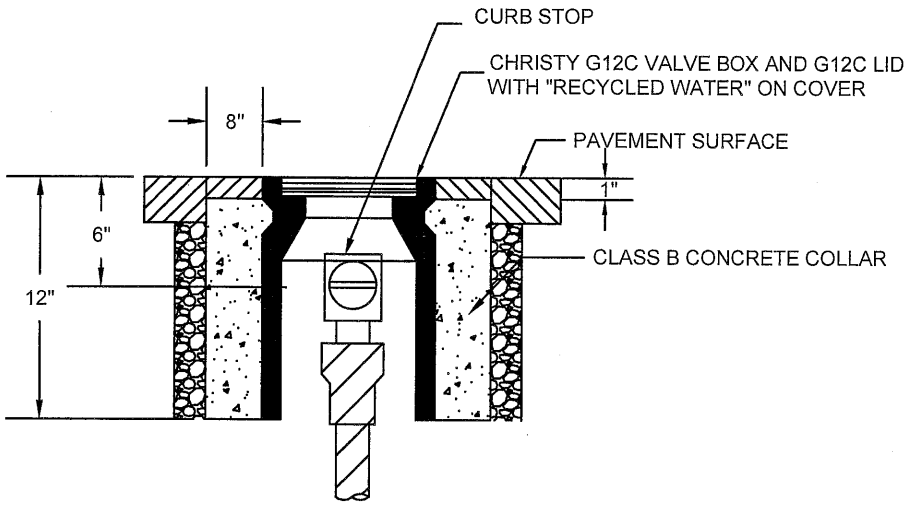

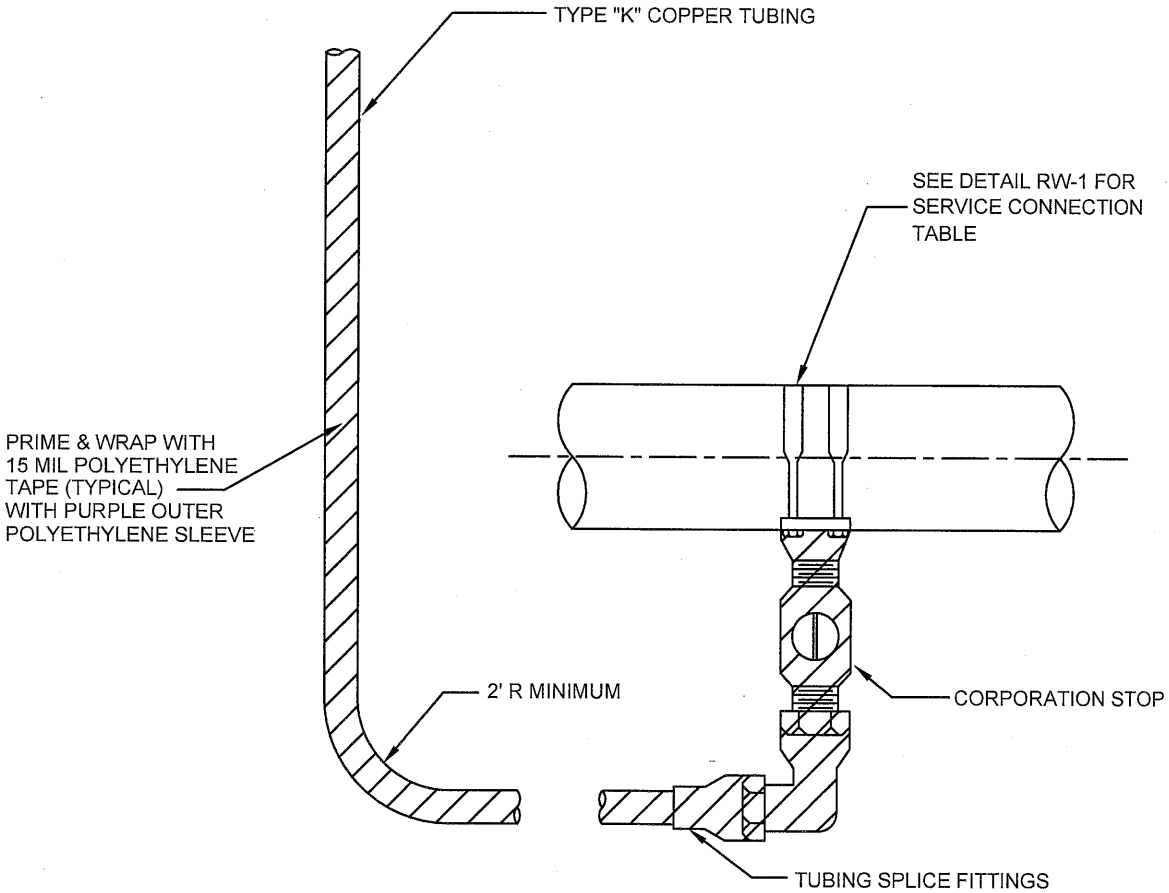

Revision	Date	Approved
Drawn : IL	Date : 6/30/15	
Checked : WM	Scale : NTS	

APPROVED BY: Jacqueline A. Solomon

7/1/15 DATE — 12/31/15 EXP. — 57093 R.C.E. NO.

REGISTERED PROFESSIONAL ENGINEER JACQUELINE ANDREWS SOLOMON No. 57093 CIVIL STATE OF CALIFORNIA

CITY OF MOUNTAIN VIEW
PUBLIC WORKS DEPARTMENT
STANDARD DETAIL

RECYCLED WATER
2" BLOW-OFF VALVE

FILE NO. RW-12

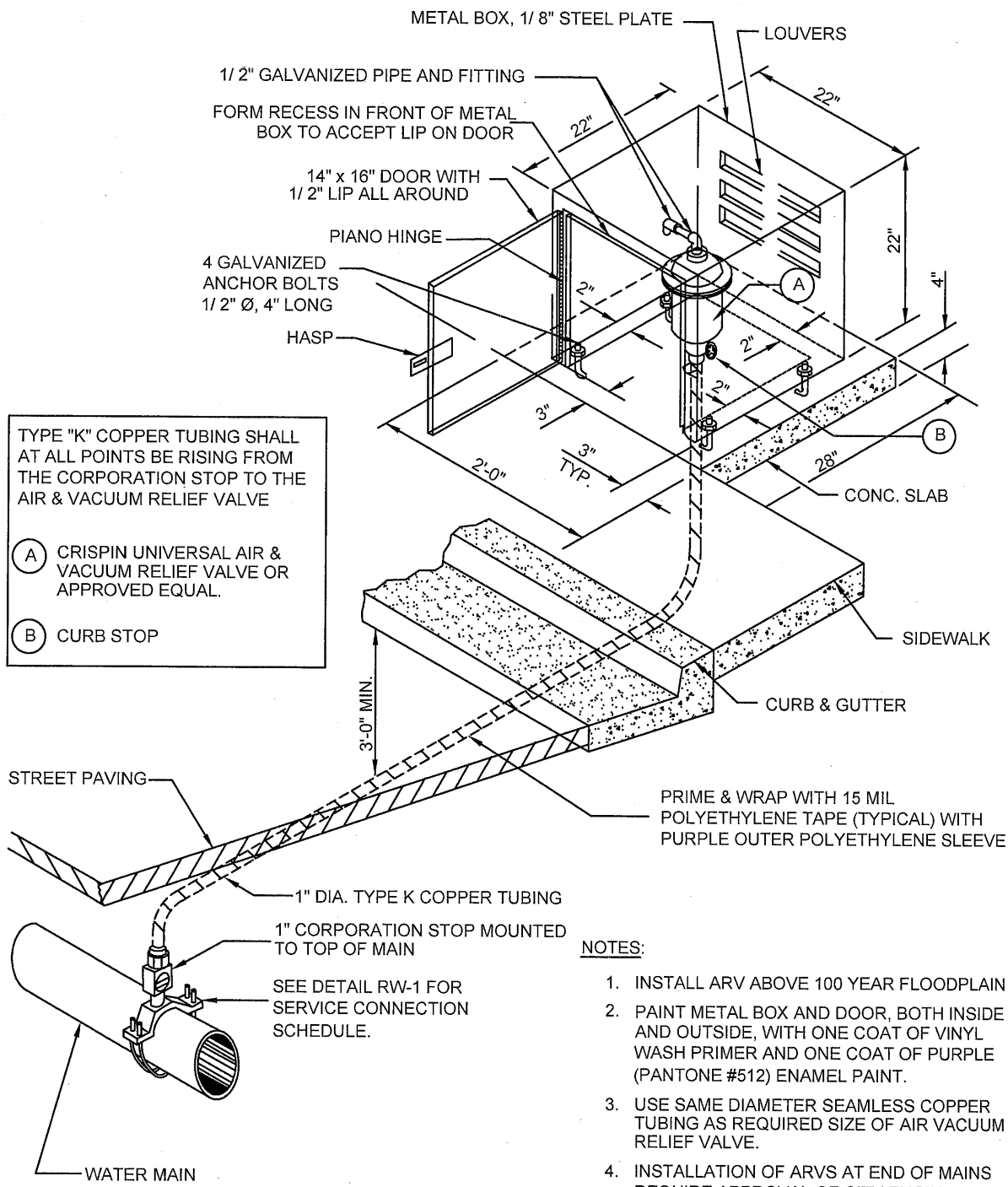

TYPE "K" COPPER TUBING SHALL AT ALL POINTS BE RISING FROM THE CORPORATION STOP TO THE AIR & VACUUM RELIEF VALVE

(A) CRISPIN UNIVERSAL AIR & VACUUM RELIEF VALVE OR APPROVED EQUAL.

(B) CURB STOP

NOTES:

1. INSTALL ARV ABOVE 100 YEAR FLOODPLAIN
2. PAINT METAL BOX AND DOOR, BOTH INSIDE AND OUTSIDE, WITH ONE COAT OF VINYL WASH PRIMER AND ONE COAT OF PURPLE (PANTONE #512) ENAMEL PAINT.
3. USE SAME DIAMETER SEAMLESS COPPER TUBING AS REQUIRED SIZE OF AIR VACUUM RELIEF VALVE.
4. INSTALLATION OF ARVS AT END OF MAINS REQUIRE APPROVAL OF CITY ENGINEER.

Revision	Date	Approved
Drawn : IL	Date : 6/30/15	
Checked : WM	Scale : NTS	

APPROVED BY: Jacqueline A. Solomon

7/1/15 DATE — 12/31/15 EXP. — 57093 R.C.E. NO.

REGISTERED PROFESSIONAL ENGINEER JACQUELINE ANDREWS SOLOMON No. 57093 CIVIL STATE OF CALIFORNIA

CITY OF MOUNTAIN VIEW
PUBLIC WORKS DEPARTMENT
STANDARD DETAIL

RECYCLED WATER
AIR RELIEF VALVE

FILE NO. RW-13